Standard - 5V Hall EMU
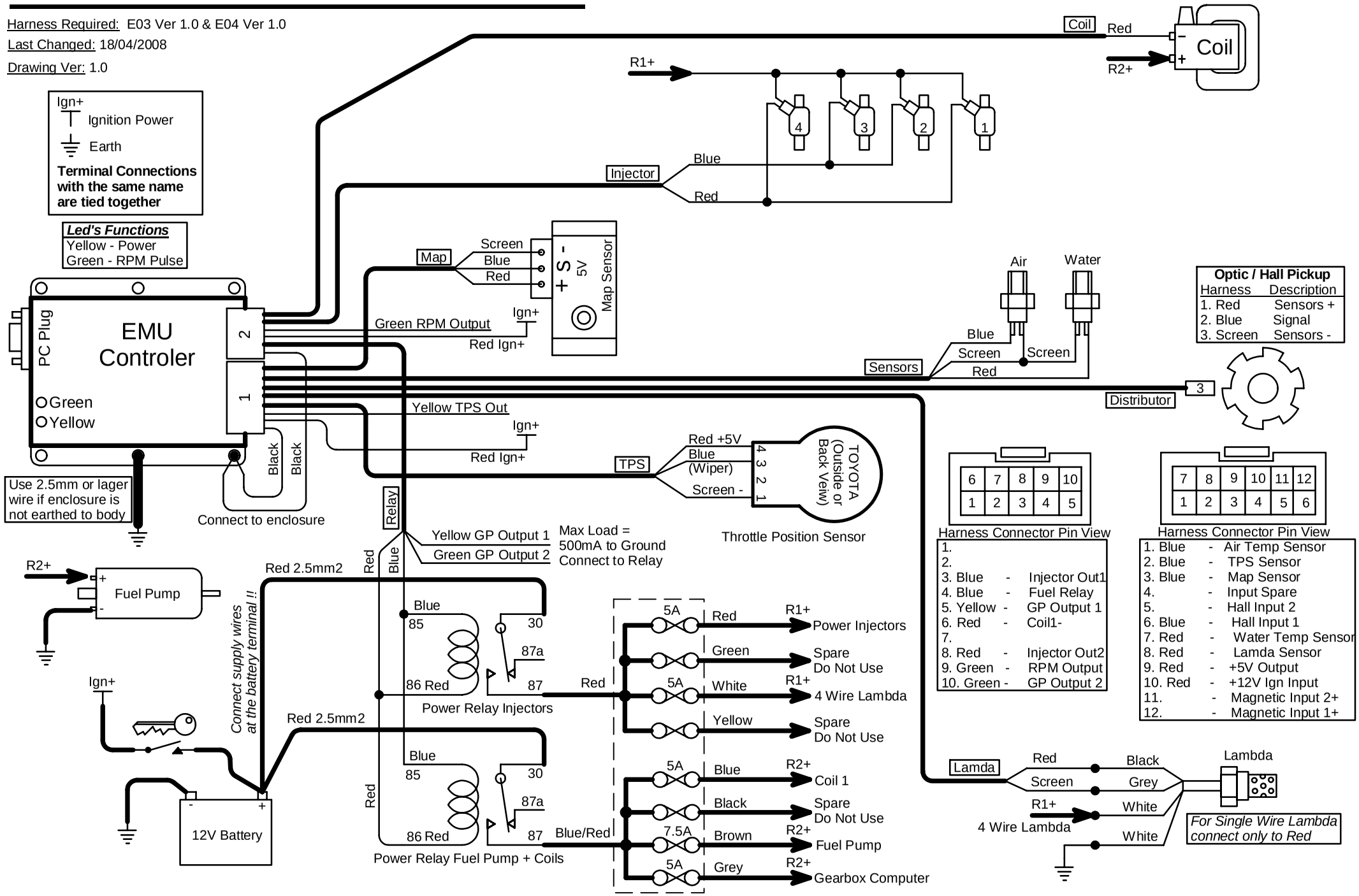
Harness Required: E03 Ver 1.0 & E04 Ver 1.0
Last Changed: 18/04/2008
Drawing Ver: 1.0